ROTO-TORQUE™

Rotary Torque Systems
for Drilling Rigs

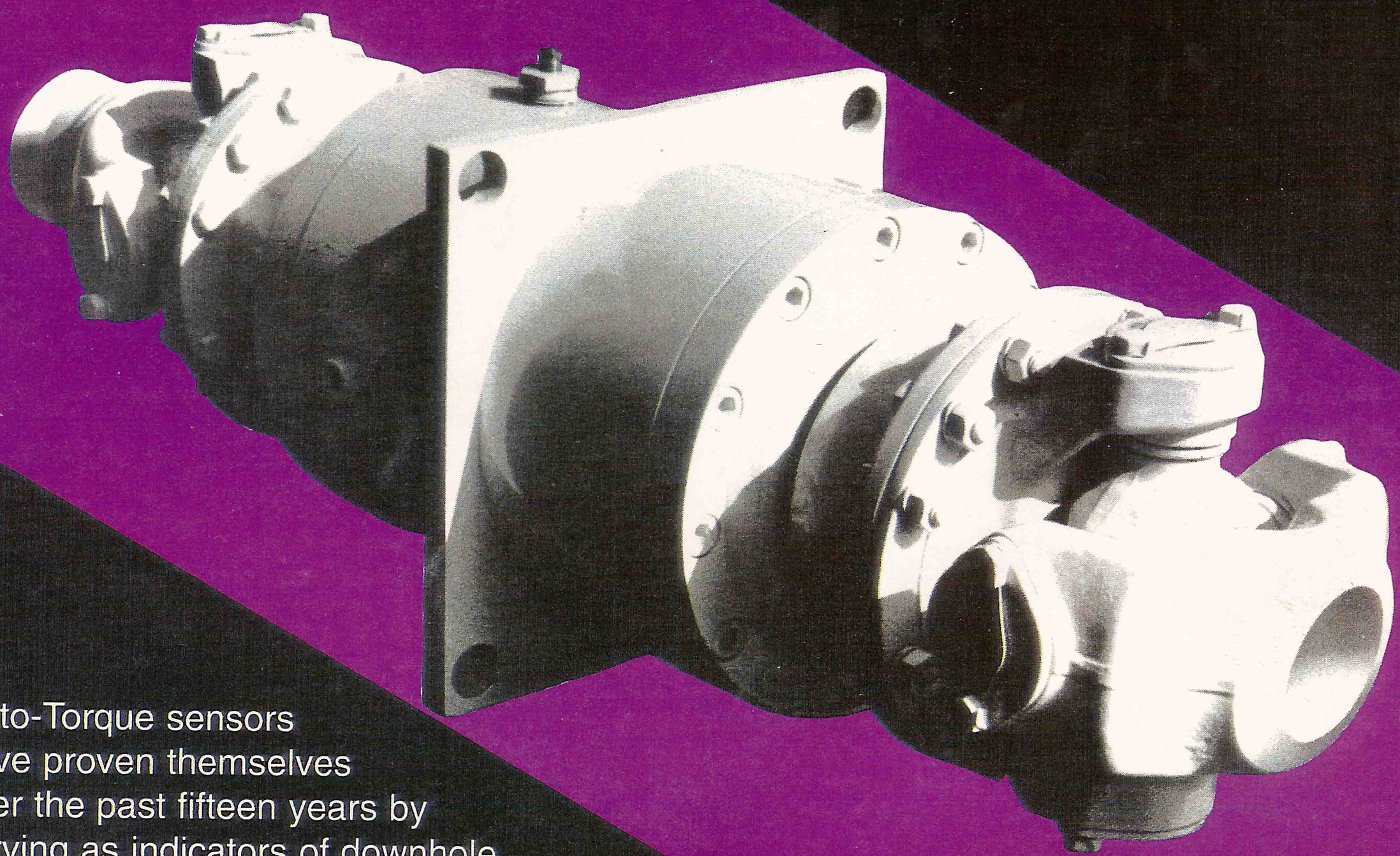

- Roto-Torque sensors have proven themselves over the past fifteen years by serving as indicators of downhole events such as coring, twist-off and bit life.
- This unique torque sensor and steady bearing assembly is designed to operate in a torque-tube driving arrangement.
- Torque measurement is achieved through a mechanical-over-hydraulic design; static torque is also measured.
- A large gauge offers a clear display; the sensor can be connected to any hydraulic recorder.
- Ideal on both mechanical and electrical powered rigs.

Further information on this and chain-drive Roto-Torques is available upon request.

Typical Torque Sensor Mounts

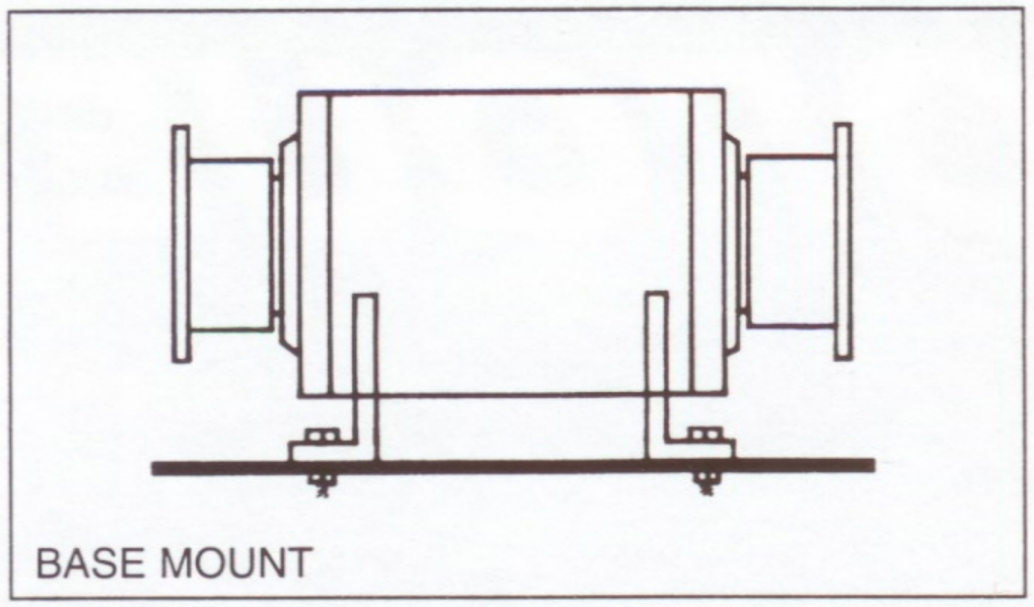

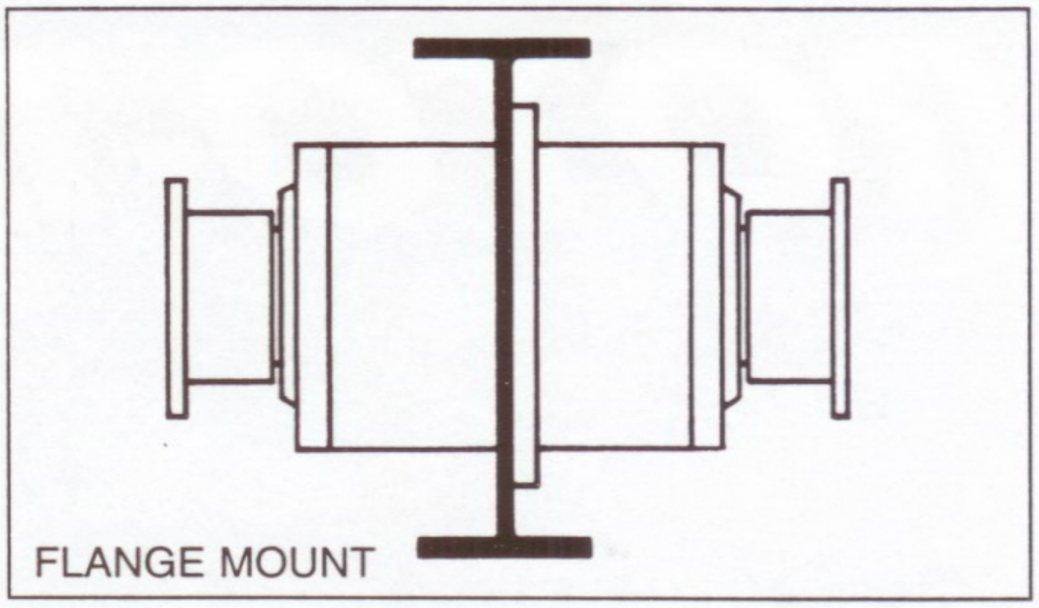

Rotary Torque Sensor and Steady Bearing

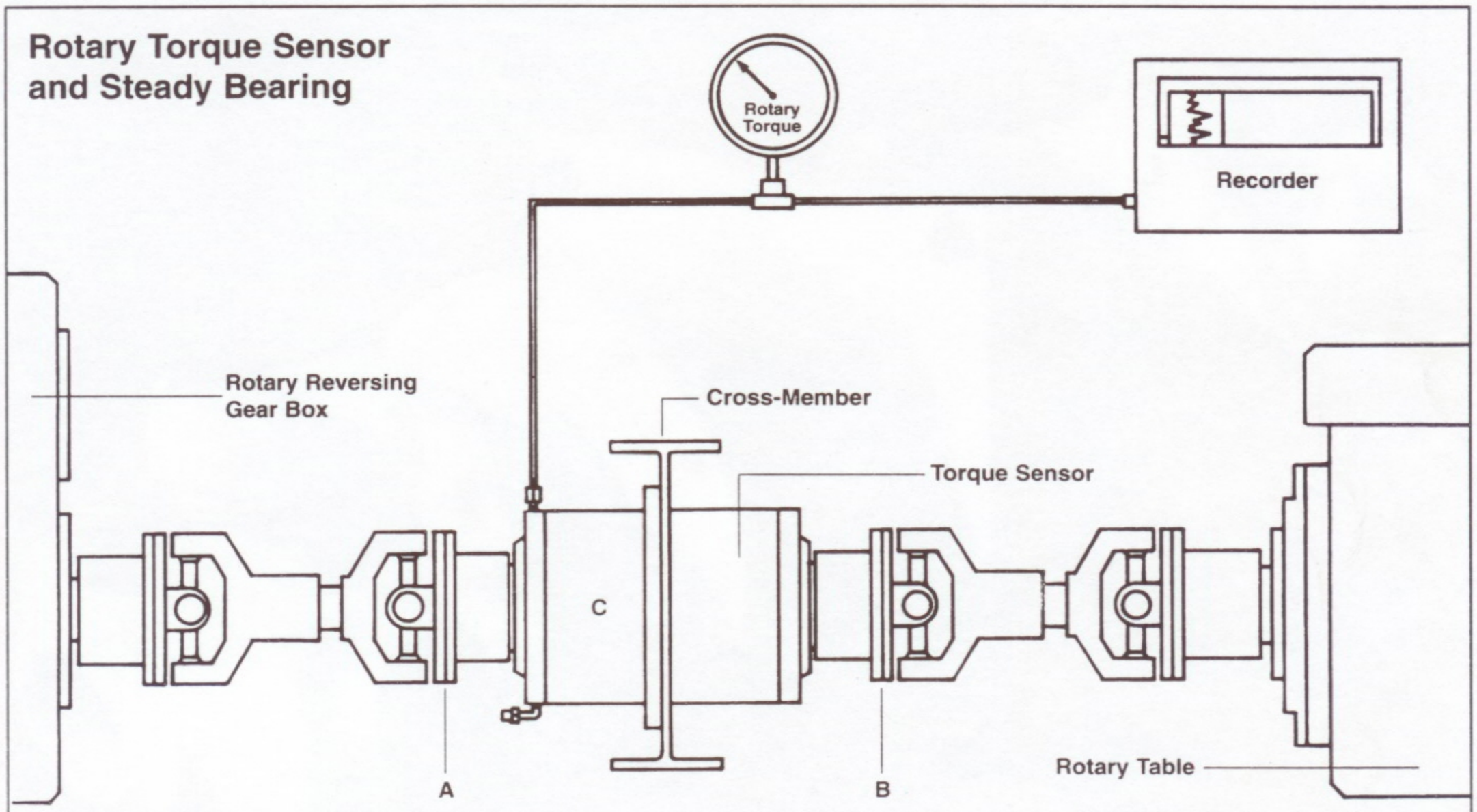

OVERALL LENGTH **A - B** 20.0"

DIAMETER **C** 9.5"

SENSOR WEIGHT 250 LBS.

SPECIFICATIONS

Sensor Lube Oil .....**90 Wt. Gear Oil typically**
Sensor Weight .....**250 lbs.**
Sensor O/A Length ...**20.0 in.**

Sensor O/A Width .....**9.5 in.**
Sensor Fluid .....**Instrumentation Oil**
Max. Input Speed .....**1200 R.P.M.**

Max. Input Torque .....**8500 Ft. lbs.**
Max. Side Load .....**Nil**
Rotation .....**Counter Clockwise**

Other models are available for Chain Drive Rotary Systems.

Sold and Serviced by:

LESKO RIG COMPONENTS LTD.
4803 68 AVE
EDMONTON, AB T6B 2N2

Manufactured by:
ROTO-TORQUE™ LTD.